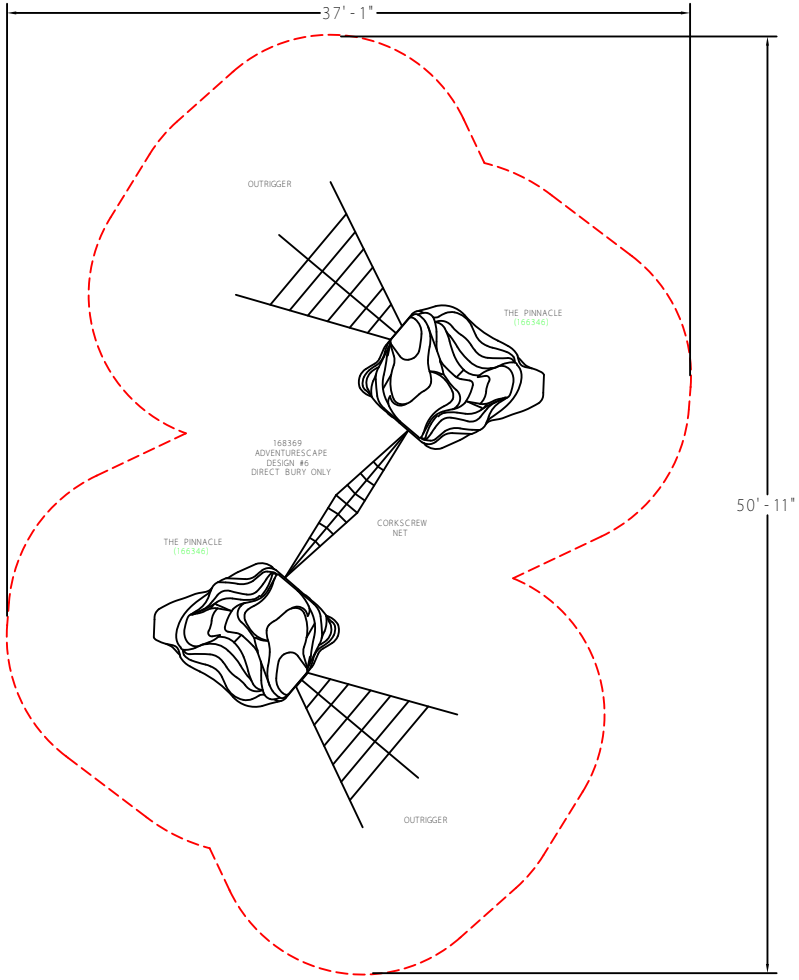

TOTAL ELEVATED PLAY COMPONENTS 0			
TOTAL ELEVATED COMPONENTS ACCESSIBLE BY RAMP	0	REQUIRED	0
TOTAL ELEVATED COMPONENTS ACCESSIBLE BY TRANSFER	0	REQUIRED	0
TOTAL ACCESSIBLE GROUND LEVEL COMPONENTS SHOWN	5	REQUIRED	0
TOTAL DIFFERENT TYPES OF GROUND LEVEL COMPONENTS	2	REQUIRED	2

landscape structures

IPEMA CERTIFIED

The play components identified on this plan are IPEMA certified. The use and layout of these components conform to the Canadian Standards Association (CSA) Standard CAN/CSA-Z614.

THIS PLAY AREA & EQUIPMENT IS DESIGNED FOR AGES 5-12 YEARS

IT IS THE MANUFACTURERS OPINION THAT THIS PLAY AREA DOES CONFORM TO THE A.D.A. ACCESSIBILITY GUIDELINES (ADAAG) ASSUMING AN ACCESSIBLE PROTECTIVE SURFACING IS PROVIDED, AS INDICATED, OR WITHIN THE ENTIRE USE ZONE.

THIS CONCEPTUAL PLAN WAS BASED ON INFORMATION AVAILABLE TO US, PRIOR TO CONSTRUCTION. DETAILED SITE INFORMATION INCLUDING SITE DIMENSIONS, TOPOGRAPHY, EXISTING UTILITIES, SOIL CONDITIONS, AND DRAINAGE SOLUTIONS SHOULD BE OBTAINED, EVALUATED, & UTILIZED IN THE FINAL DESIGN. PLEASE VERIFY ALL DIMENSIONS OF PLAY AREA, SIZE, ORIENTATION, AND LOCATION OF ALL EXISTING UTILITIES, EQUIPMENT, AND SITE FURNISHINGS PRIOR TO ORDERING. SLIDES SHOULD NOT FACE THE HOT AFTERNOON SUN.

CHOOSE A PROTECTIVE SURFACING MATERIAL THAT HAS A CRITICAL HEIGHT VALUE OF AT LEAST THE HEIGHT OF THE HIGHEST ACCESSIBLE PART/FALL HEIGHT OF THE ADJACENT EQUIPMENT. (REF. CONSUMER PRODUCT SAFETY COMMISSION (CPSC) GUIDELINES, SECTION 10: SURFACING.)

DESIGNED BY:

COPYRIGHT:1-14-10
LANDSCAPE STRUCTURES, INC.

601 7th STREET SOUTH - P.O. BOX 198
DELANO, MINNESOTA 55328
PH: 1-800-328-0035 FAX: 1-763-972-6091

Date	Previous Drawing #	Initials

SCALE: IN FEET
0' 1' 5' 10'

DESIGN #2699

LANDSCAPE STRUCTURES

SYSTEM TYPE:
NO STRUCTURE

DRAWING #:
2699

ISO 14001 REGISTERED

ISO 9001 certified